GALEA

5070PJH100R05-22x40

EAN 4031582308600

BETTER MOBILITY. BETTER LIFE.

Swivel castor, housing made of Polyamide, double ball bearing swivel head, solid plug fitting. Wheel centre made of Polypropylene, Tread: TENTEprene (thermoplastic rubber), grey non-marking, with threadguards, plain bearing

Picture may differ from original product

Technical Data

Wheel diameter	100 mm
Wheel width	30 mm
Bolt-Ø	22 mm
Bolt length	40 mm
Offset	40 mm
Swivel Interference	180 mm
Overall height	139 mm
Temperature	-20 / +60 °C
Standard	EN_12530
Weight	0.529 kg
Swivel Radius	90 mm
Hardness of tread	Shore A 87
Load capacity	100 kg
Load capacity (static)	200 kg

Advantages at a glance

Roll performance	●●●○○
Movement noise	●●●○○
Attrition	●●●○○
Corrosion resistance	●●●●○

Dimensions

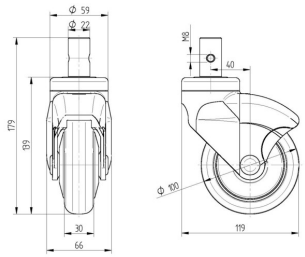

Structure & Mounting

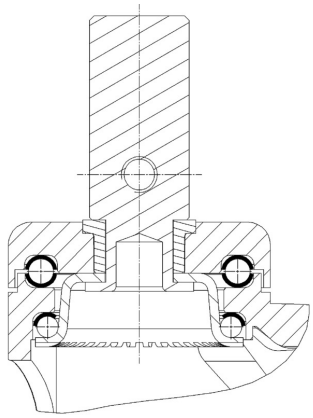

© Copyright 2024 TENTE International **www.tente.com** 19/05/2024