SMILES

5520PJI050L51-10 CAT, Yellow

EAN 4031582335606

Swivel castor, housing made of Polyamide, with blind hole fitting. Wheel centre made of Polypropylene, Tread: TENTEprene (thermoplastic rubber), grey non-marking, plain bearing

Picture may differ from original product

Technical Data

Wheel diameter	50 mm
Wheel width	8,5 mm
Castor width	54.3 mm
Centre hole	10 mm
Dome-Ø	23 mm
Offset	20 mm
Swivel Interference	120 mm
Overall height	71.5 mm
Temperature	- 10 / + 40 °C
Standard	EN_12528
Weight	0.101 kg
Swivel Radius	60 mm
Hardness of tread	Shore A 87
Load capacity	40 kg
Load capacity (static)	80 kg

Advantages at a glance

Roll performance	●●●○○
Movement noise	●●●○○
Attrition	●●●○○
Corrosion resistance	●●●●○

Dimensions

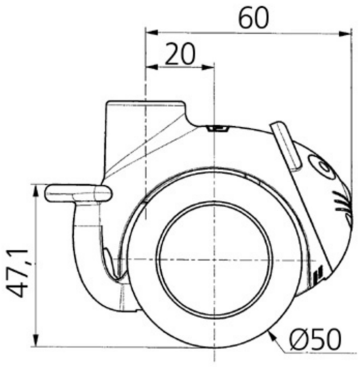

Structure & Mounting

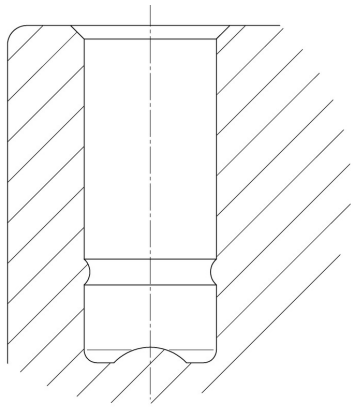

© Copyright 2024 TENTE International **www.tente.com** 02/05/2024

SMILES

5520PJI050L51-10 CAT, Yellow

EAN 4031582335606

BETTER MOBILITY. BETTER LIFE.

Structure & Mounting

reddot design award winner