LEVINA LIGHT

5220PJP100S70-10X25/11X29.1

EAN 4031582492330

BETTER MOBILITY. BETTER LIFE.

Swivel castor, Housing made of glass-filled Polyamide, threaded stem with hexagon neck. Wheel centre made of Polypropylene, Tread: TENTEprene (thermoplastic rubber), grey non-marking, precision ball bearing

Picture may differ from original product

Technical Data

Wheel diameter	100 mm
Wheel width	32 mm
Threaded stem	10X25 mm
Offset	36 mm
Swivel Interference	172 mm
Overall height	146.3 mm
Temperature	- 10 / + 40 °C
Standard	EN_12530
Swivel Radius	86 mm
Hardness of tread	Shore A 87
Load capacity	82 kg
Load capacity (static)	0 kg

Dimensions

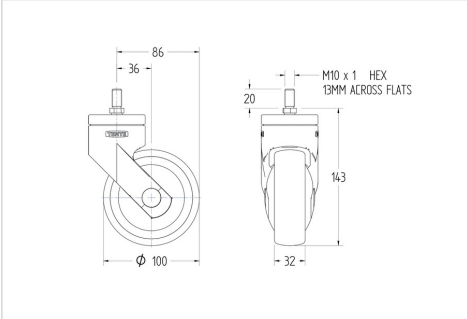

Advantages at a glance

Roll performance	●●●○○
Movement noise	●●●●○
Attrition	●●●○○
Corrosion resistance	●●●●○

© Copyright 2024 TENTE International **www.tente.com** 12/10/2024