LEVINA

5377PJP125P30-11

EAN 4031582368758

BETTER MOBILITY. BETTER LIFE.

Swivel castor with total lock, tail end of castor, housing and wheels made from high grade synthetic materials, double ball bearing swivel head, bolt hole. Wheel centre made of Polypropylene, Tread: TENTEprene (thermoplastic rubber), grey non-marking, precision ball bearing
Hint: These castors are also with grey locking lever available.

Picture may differ from original product

Technical Data

Wheel diameter	125 mm
Wheel width	32 mm
Castor width	59 mm
Centre hole	11 mm
Dome-Ø	59 mm
Offset	38 mm
Swivel Interference	201 mm
Overall height	161 mm
Temperature	- 10 / + 40 °C
Standard	EN_12530
Weight	0.579 kg
Swivel Radius	100.5 mm
Hardness of tread	Shore A 87
Load capacity	100 kg
Load capacity (static)	200 kg

Dimensions

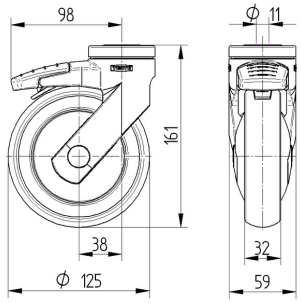

Structure & Mounting

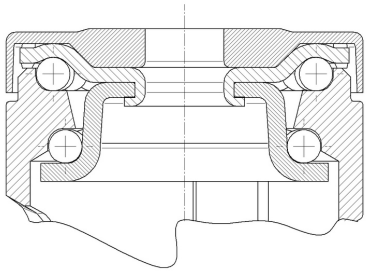

Advantages at a glance

Roll performance	●●●○○
Movement noise	●●●●○
Attrition	●●●○○
Corrosion resistance	●●●●○

© Copyright 2024 TENTE International **www.tente.com** 28/04/2024

LEVINA

5377PJP125P30-11

EAN 4031582368758

BETTER MOBILITY. BETTER LIFE.

Structure & Mounting

Design Award Winner

German Designer Club

universal design award 09