ANIKA

5925UAI055L51-10

EAN 4031582406405

BETTER MOBILITY. BETTER LIFE.

Swivel castor with wheel brake, housing made of Polyamide, with blind hole fitting. Wheel centre made of Polyamide, Tread: Polyurethane, plain bearing

Picture may differ from original product

Technical Data

Wheel diameter	55 mm
Wheel width	11 mm
Castor width	37 mm
Centre hole	10 mm
Dome-Ø	18 mm
Swivel Interference	128 mm
Overall height	57 mm
Temperature	- 10 / + 40 °C
Standard	EN_12528
Weight	0.65 kg
Swivel Radius	64 mm
Hardness of tread	Shore A 92
Load capacity	40 kg
Load capacity (static)	80 kg

Advantages at a glance

Roll performance	●●●○○
Movement noise	●●●○○
Attrition	●●●○○
Corrosion resistance	●●●●○

Dimensions

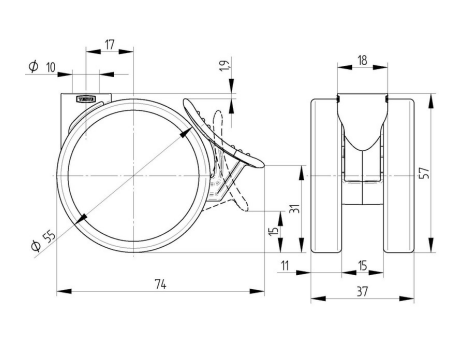

Structure & Mounting

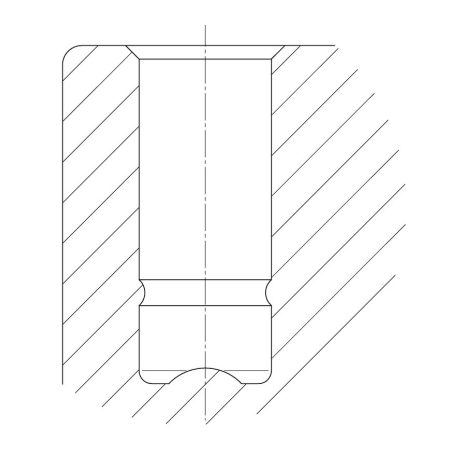

© Copyright 2024 TENTE International **www.tente.com** 12/10/2024