STORA

3875ZJJ160P30-13 RIGHT

EAN 4031582307764

BETTER MOBILITY. BETTER LIFE.

Walkway Castor with automatic side brake for moving walkways, housing made of pressed steel, bright zinc plated, blue passivated, double ball bearing swivel head, flanged wheel with one ball race, left and right hand design, wheel axle with nut, Wheel centre made of plastic, Tread: TENTEprene (thermoplastic rubber), with threadguards, roller bearing. Designed for the following palletsize: track width: approx: 2,75 mm, groove width: approx. 5,7 mm, groove depth: > 10 mm.
Hint:
Load capacity 160 kg per castor on level and securely attached floors, 40 kg per castor on walkways. Use on uneven floors, outdoors (ground beams, gaps, joints, manhole covers, etc.) can affect the life expectancy of castors.

Picture may differ from original product

Technical Data

Wheel diameter	160 mm
Wheel width	40 mm
Castor width	96 mm
Centre hole	13 mm
Dome-Ø	96 mm
Offset	55 mm
Swivel Interference	270 mm
Overall height	186 mm
Temperature	- 20 / + 60 °C
Standard	EN_12532
Weight	1.899 kg
Swivel Radius	135 mm
Hardness of tread	Shore A 87
Load capacity	160 kg
Load capacity (static)	320 kg

Dimensions

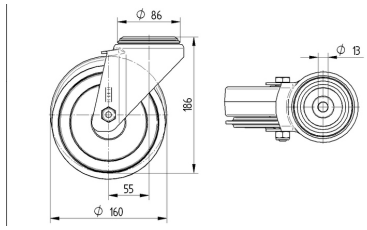

Structure & Mounting

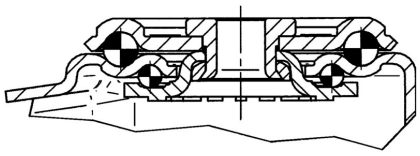

Advantages at a glance

Roll performance	●●●○○
Movement noise	●●●○○
Attrition	●●●○○
Corrosion resistance	●●●○○

© Copyright 2024 TENTE International **www.tente.com** 12/10/2024

STORA

3875ZJJ160P30-13 RIGHT

EAN 4031582307764

BETTER MOBILITY. BETTER LIFE.
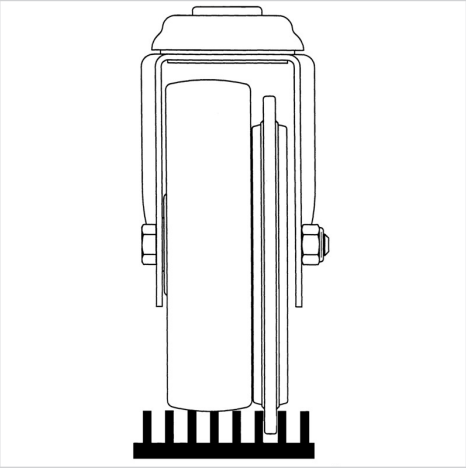
Structure & Mounting