FORMA

6944UFP125P33 L1-L30 grey

EAN 4031582476408

BETTER MOBILITY. BETTER LIFE.

Swivel castor with central, total lock and central directional lock, housing made of alu die-casting, powder coated, plate fitting. Wheel centre made of Polyamide, Tread: elastic-tyre, non-marking, precision ball bearing

Picture may differ from original product

Technical Data

Wheel diameter	125 mm
Wheel width	18 mm
Size of Plate	92 x 64 mm
Plate hole centres	73 x 43 mm
Plate hole	8 mm
Offset	41 mm
Overall height	180 mm
Temperature	- 18 / + 120 °C
Swivel Radius	109 mm
Hardness of tread	Shore 60 A
Load capacity	125 kg

Advantages at a glance

Roll performance	●●●●○
Movement noise	●●●●○
Attrition	●●●●○
Corrosion resistance	●●●○○

© Copyright 2024 TENTE International **www.tente.com** 12/10/2024

FORMA

6944UFP125P33 L1-L30 grey

EAN 4031582476408
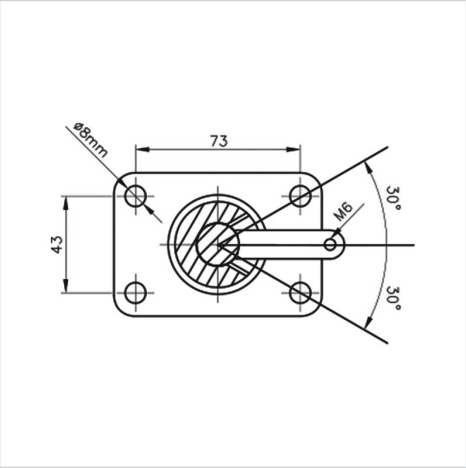
Structure & Mounting