LEVINA LIGHT

5220PJP075P50

EAN 4031582492408

BETTER MOBILITY. BETTER LIFE.

Swivel castor, Housing made of glass-filled Polyamide, plate fitting. Wheel centre made of Polypropylene, Tread: TENTEprene (thermoplastic rubber), grey non-marking, precision ball bearing

Picture may differ from original product

Technical Data

Wheel diameter	75 mm
Wheel width	25 mm
Size of Plate	77 x 67 mm
Plate hole centres	61,5/56 x 51,5/46,5 mm
Plate hole	8,5 mm
Centre hole	10 mm
Offset	27 mm
Swivel Interference	129 mm
Overall height	115.5 mm
Temperature	- 10 / + 40 °C
Standard	EN_12530
Weight	0.342 kg
Swivel Radius	64.5 mm
Hardness of tread	Shore A 87
Load capacity	75 kg

Dimensions

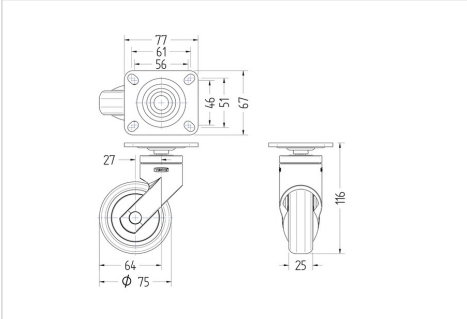

Advantages at a glance

Roll performance	●●●○○
Movement noise	●●●●○
Attrition	●●●○○
Corrosion resistance	●●●●○

© Copyright 2024 TENTE International **www.tente.com** 12/10/2024