LEVINA LIGHT

5220PJP100P52

EAN 4031582492774

BETTER MOBILITY. BETTER LIFE.

Swivel castor, Housing made of glass-filled Polyamide, plate fitting. Wheel centre made of Polypropylene, Tread: TENTEprene (thermoplastic rubber), grey non-marking, precision ball bearing

Picture may differ from original product

Technical Data

Wheel diameter	100 mm
Wheel width	32 mm
Size of Plate	95x70 mm
Plate hole centres	52/44,45x76/72 mm
Plate hole	11 mm
Offset	36 mm
Swivel Interference	172 mm
Overall height	150 mm
Temperature	- 10 / + 40 °C
Standard	EN_12530
Weight	0.566 kg
Swivel Radius	86 mm
Hardness of tread	Shore A 87
Load capacity	82 kg
Suitable wheel sizes	100 mm

Dimensions

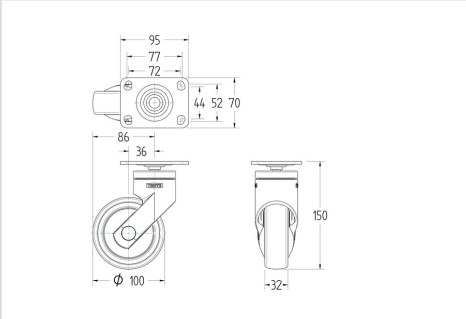

Advantages at a glance

Roll performance	●●●○○
Movement noise	●●●●○
Attrition	●●●○○
Corrosion resistance	●●●●○

© Copyright 2024 TENTE International **www.tente.com** 12/10/2024

LEVINA LIGHT

5220PJP100P52

EAN 4031582492774

BETTER MOBILITY. BETTER LIFE.
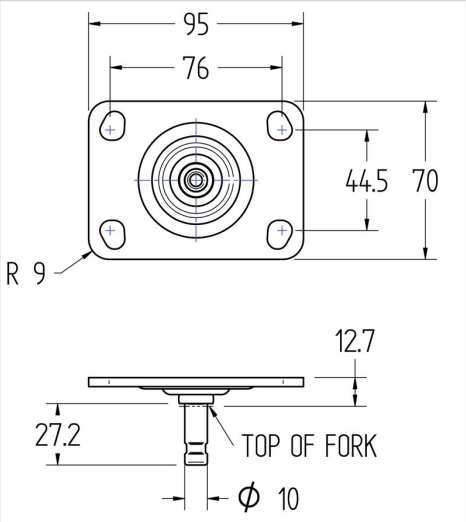
Structure & Mounting