LEVINA

5380XSC100P50

EAN 4031582359541

BETTER MOBILITY. BETTER LIFE.

Swivel castor, housing made from high grade synthetic materials with metal parts made of Stainless Steel, double ball bearing swivel head, plate fitting. Wheel centre made of Polyamide, electric conductive, tread made of Polyurethane, with threadguards, precision ball bearing, stainless

Picture may differ from original product

Technical Data

Wheel diameter	100 mm
Wheel width	32 mm
Size of Plate	77 x 67 mm
Plate hole centres	61,5/56 x 51,5/46,5 mm
Plate hole	8,5 mm
Offset	36 mm
Swivel Interference	172 mm
Overall height	137 mm
Temperature	- 10 / + 40 °C
Standard	EN_12530
Swivel Radius	86 mm
Hardness of tread	Shore A 91
Load capacity	100 kg
Load capacity (static)	200 kg

Advantages at a glance

Roll performance	●●●○○
Movement noise	●●●●○
Attrition	●●●●○
Corrosion resistance	●●●●●

Dimensions

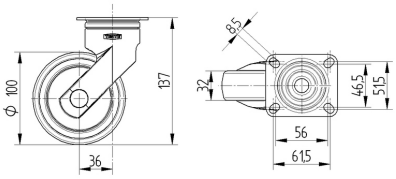

Structure & Mounting

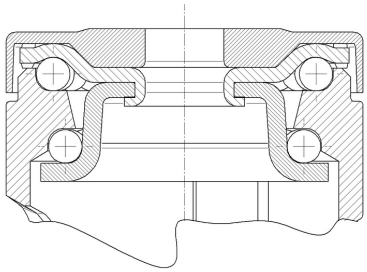

LEVINA

5380XSC100P50

EAN 4031582359541

BETTER MOBILITY. BETTER LIFE.

Structure & Mounting

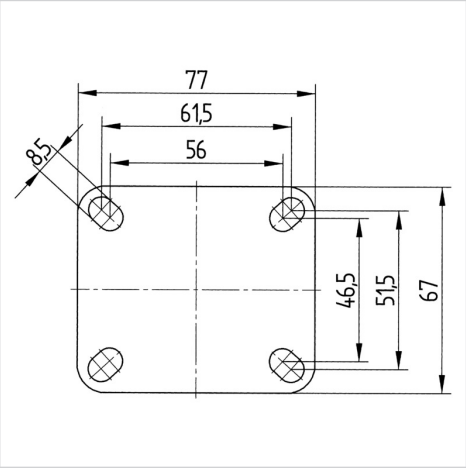

Design Award Winner

German Designer Club

universal design award 09