KAPPA

9680TOO125P63

EAN 4031582315240

BETTER MOBILITY. BETTER LIFE.

Swivel castor, housing and plate steel-welded, bright zinc plated, blue passivated, sealed single swivel double ball bearing, threaded king pin and locking nut secured, grease nipple, wheel axle with nut, plate fitting. Wheel centre made of Polyamide, heavy duty, plain bearing

Picture may differ from original product

Technical Data

Wheel diameter	125 mm
Wheel width	50 mm
Castor width	110 mm
Size of Plate	135 x 110 mm
Plate hole centres	105 x 80/75 mm
Plate hole	11 mm
Dome-Ø	111 mm
Offset	48 mm
Swivel Interference	225 mm
Overall height	170 mm
Temperature	- 40 / + 80 °C
Standard	EN_12533
Weight	3.425 kg
Swivel Radius	112.5 mm
Hardness of tread	Shore D 75
Load capacity	700 kg
Load capacity (static)	1400 kg

Advantages at a glance

Roll performance	●●●●○
Movement noise	●○○○○
Attrition	●●●●●
Corrosion resistance	●●●○○

Dimensions

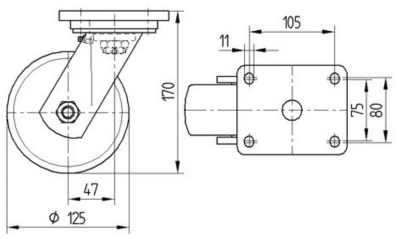

Structure & Mounting

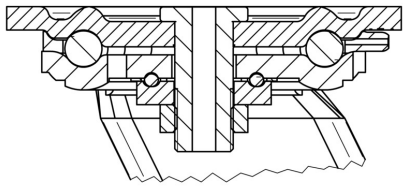

KAPPA

9680TOO125P63

EAN 4031582315240

BETTER MOBILITY. BETTER LIFE.
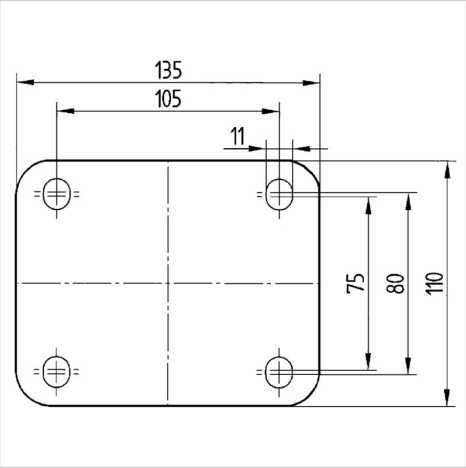
Structure & Mounting