# LINEA

## 5944UAP150R36-32S27 safety OH155

EAN 4031582412765

BETTER MOBILITY. BETTER LIFE.

Swivel castor with central, total lock and central directional lock, housing made of Polyamide, precision ball bearing in swivel head. Swivel castor with automatic locking system, stem with cam hole for profile bars, short version. Wheel centre made of Polyamide, Tread: Polyurethane, precision ball bearing

:
The LINEA safety with dead man brake is designed/suitable for equipment with a low centre of gravity (e.g. hospital beds). It causes the equipment to brake automatically and immediately as soon as the control lever or handle is released. If used for equipment with a higher centre of gravity, a joint technical assessment is necessary in accordance with product liability law.

Picture may differ from original product

### Technical Data

| | |
|---|---|
| Wheel diameter | 150 mm |
| Wheel width | 15 mm |
| Castor width | 71 mm |
| Bolt-Ø | 32 mm |
| Bolt length | 50 mm |
| Offset | 47.5 mm |
| Swivel Interference | 254 mm |
| Overall height | 155 mm |
| Temperature | - 10 / + 40 °C |
| Standard | similar_EN12531 |
| Weight | 1.115 kg |
| Swivel Radius | 122.5 mm |
| Load capacity | 150 kg |
| Load capacity (static) | 450 kg |

### Advantages at a glance

| | |
|---|---|
| Roll performance | ●●●●● |
| Movement noise | ●●●○○ |
| Attrition | ●●●●○ |
| Corrosion resistance | ●●●●○ |

### Dimensions

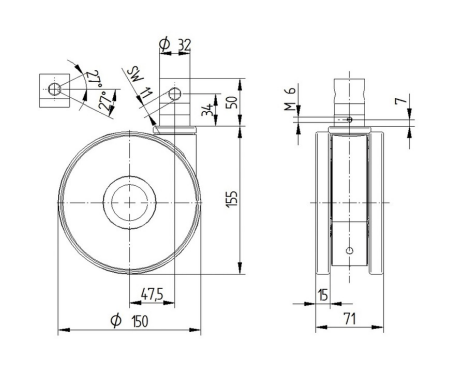

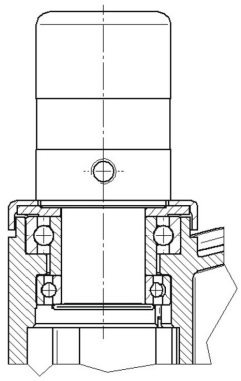
### Structure & Mounting