STYLEA

5920UOI075L51-10 DOM20

EAN 4031582310962

BETTER MOBILITY. BETTER LIFE.

Swivel castor, housing made of Polyamide, with blind hole fitting. Wheel centre made of Polyamide, plain bearing

Picture may differ from original product

Technical Data

Wheel diameter	75 mm
Wheel width	8 mm
Castor width	54 mm
Centre hole	10 mm
Dome-Ø	20 mm
Offset	30 mm
Swivel Interference	124 mm
Overall height	77 mm
Temperature	- 20 / + 60 °C
Standard	EN_12528
Weight	0.119 kg
Swivel Radius	62 mm
Hardness of tread	Shore D 65
Load capacity	50 kg
Load capacity (static)	100 kg

Structure & Mounting

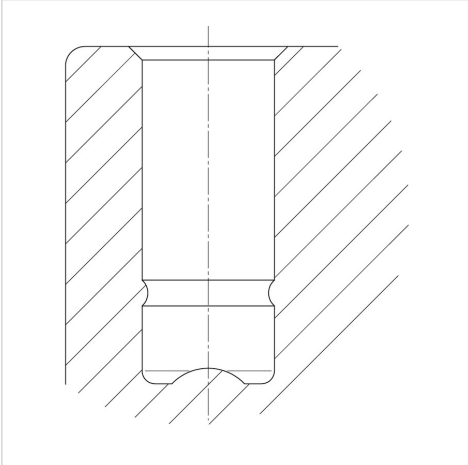

Advantages at a glance

Roll performance	●●●○○
Movement noise	●●●○○
Attrition	●●●●●
Corrosion resistance	●●●●○

© Copyright 2024 TENTE International **www.tente.com** 12/10/2024