DELTA

3642ITP200P63 Flat

EAN 4031582337433

BETTER MOBILITY. BETTER LIFE.

Swivel castor with total lock, head end of castor, housing made of heavy pressed steel, bright zinc plated, blue passivated, precision ball bearing swivel head, sealed, wheel axle with nut, plate fitting. Wheel centre made of Aluminium, Tread: Polyurethane, casted, precision ball bearing

Picture may differ from original product

Technical Data

Wheel diameter	200 mm
Wheel width	50 mm
Castor width	94 mm
Size of Plate	137 x 105 mm
Plate hole centres	105 x 80/75 mm
Plate hole	11 mm
Dome-Ø	94 mm
Offset	55 mm
Swivel Interference	310 mm
Overall height	250 mm
Temperature	- 10 / + 60 °C
Standard	EN_12532
Weight	3.631 kg
Swivel Radius	155 mm
Hardness of tread	Shore A 92
Load capacity	600 kg
Load capacity (static)	1200 kg

Advantages at a glance

Roll performance	●●●○○
Movement noise	●●●○○
Attrition	●●●●○
Corrosion resistance	●●●○○

Dimensions

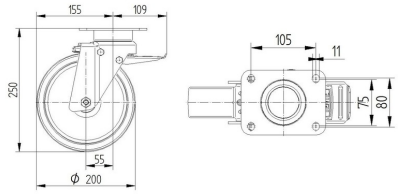

Structure & Mounting

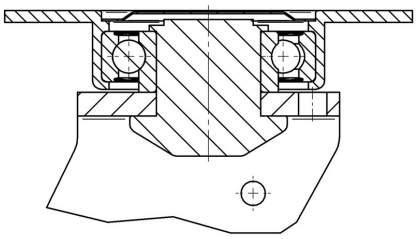

DELTA

3642ITP200P63 Flat

EAN 4031582337433

BETTER MOBILITY. BETTER LIFE.
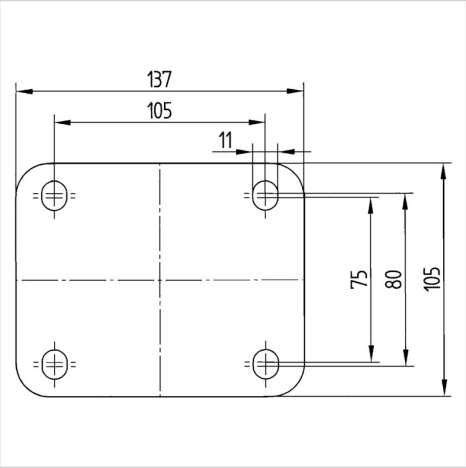
Structure & Mounting