AGILA

2074PJP150R26-28S45

EAN 4031582348422

BETTER MOBILITY. BETTER LIFE.

Swivel castor with central, total lock and central directional lock, housing made of pressed steel, bright zinc plated, blue passivated, double ball bearing swivel head, wheel axle riveted for attaching the cover, covering of the housing made of Polypropylene, RAL 9002 grey-white, stem with cam hole for profile bars. Wheel centre made of Polypropylene, Tread: TENTEprene (thermoplastic rubber), grey non-marking, precision ball bearing

Picture may differ from original product

Technical Data

Wheel diameter	150 mm
Wheel width	32 mm
Castor width	67 mm
Bolt-Ø	28 mm
Bolt length	96 mm
Dome-Ø	67 mm
Offset	45 mm
Swivel Interference	240 mm
Overall height	188 mm
Temperature	- 20 / + 60 °C
Standard	EN_12530
Weight	1.098 kg
Swivel Radius	120 mm
Hardness of tread	Shore A 87
Load capacity	100 kg
Load capacity (static)	200 kg

Structure & Mounting

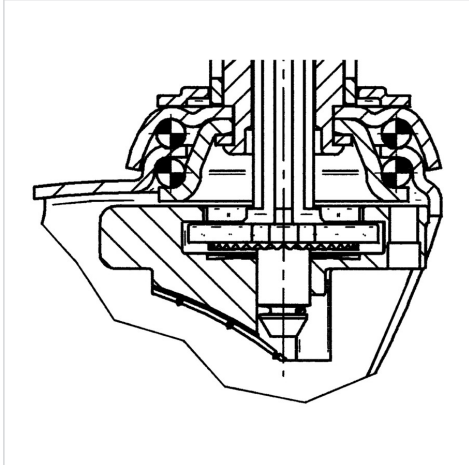

Advantages at a glance

Roll performance	●●●○○
Movement noise	●●●○○
Attrition	●●●○○
Corrosion resistance	●●●○○

© Copyright 2024 TENTE International **www.tente.com** 12/10/2024