LINEA

5944UAP150R36-32S30 CC R9002

EAN 4031582382686

BETTER MOBILITY. BETTER LIFE.

Swivel castor with central, total lock and central directional lock, housing made of Polyamide, precision ball bearing in swivel head, stem with cam hole for profile bars, short version. Wheel centre made of Polyamide, Tread: Polyurethane, precision ball bearing Housing with integrated cable catcher made of Polyethylene.

Picture may differ from original product

Technical Data

Wheel diameter	150 mm
Wheel width	15 mm
Castor width	71 mm
Bolt-Ø	32 mm
Bolt length	50 mm
Offset	47.5 mm
Swivel Interference	254 mm
Overall height	155 mm
Temperature	- 10 / + 40 °C
Standard	similar_EN12531
Weight	1.11 kg
Swivel Radius	122.5 mm
Load capacity	150 kg
Load capacity (static)	450 kg

Advantages at a glance

Roll performance	●●●●●
Movement noise	●●●○○
Attrition	●●●●○
Corrosion resistance	●●●●○

Dimensions

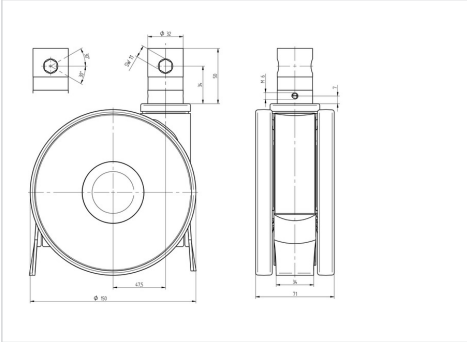
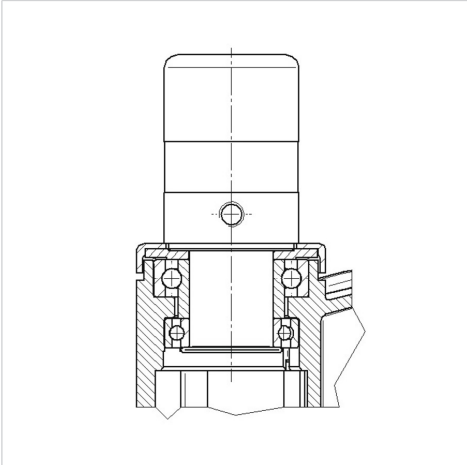
Structure & Mounting