LINEA

5944UAP150R36-32S30OH155 4xM6

EAN 4031582338904

Swivel castor with central, total lock and central directional lock, housing made of Polyamide, precision ball bearing in swivel head, stem with cam hole for profile bars, short version. Wheel centre made of Polyamide, Tread: Polyurethane, precision ball bearing TÜV Süd certified product.

Picture may differ from original product

Technical Data

Wheel diameter	150 mm
Wheel width	15 mm
Castor width	71 mm
Bolt-Ø	32 mm
Bolt length	50 mm
Dome-Ø	45.5 mm
Offset	47.5 mm
Swivel Interference	254 mm
Overall height	155 mm
Temperature	- 10 / + 40 °C
Standard	EN_12531
Weight	1.077 kg
Swivel Radius	127 mm
Hardness of tread	Shore D 42
Load capacity	150 kg
Load capacity (static)	450 kg

Advantages at a glance

Roll performance	●●●●●
Movement noise	●●●○○
Attrition	●●●●○
Corrosion resistance	●●●●○

Dimensions

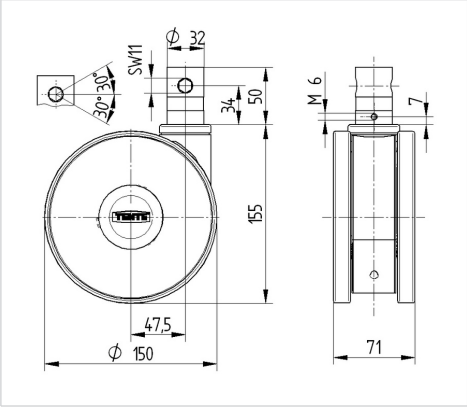

Structure & Mounting

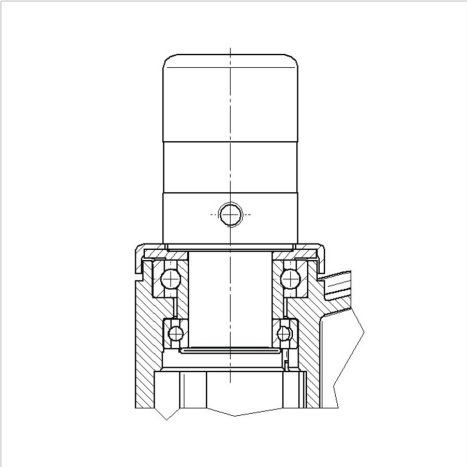

LINEA

5944UAP150R36-32S30OH155 4xM6

EAN 4031582338904

BETTER MOBILITY. BETTER LIFE.

Structure & Mounting