# LINEA

## 5944UAP150R36-32S30 CC R9002

EAN 4031582382686

BETTER MOBILITY. BETTER LIFE.

Swivel castor with central, total lock and central directional lock, housing made of Polyamide, precision ball bearing in swivel head, stem with cam hole for profile bars, short version. Wheel centre made of Polyamide, Tread: Polyurethane, precision ball bearing Housing with integrated cable catcher made of Polyethylene.

Picture may differ from original product

### Technical Data

| | |
|---|---|
| Wheel diameter | 150 mm |
| Wheel width | 15 mm |
| Castor width | 71 mm |
| Bolt-Ø | 32 mm |
| Bolt length | 50 mm |
| Offset | 47.5 mm |
| Swivel Interference | 254 mm |
| Overall height | 155 mm |
| Temperature | - 10 / + 40 °C |
| Standard | similar_EN12531 |
| Weight | 1.11 kg |
| Swivel Radius | 122.5 mm |
| Load capacity | 150 kg |
| Load capacity (static) | 450 kg |

### Advantages at a glance

| | |
|---|---|
| Roll performance | ●●●●● |
| Movement noise | ●●●○○ |
| Attrition | ●●●●○ |
| Corrosion resistance | ●●●●○ |

### Dimensions

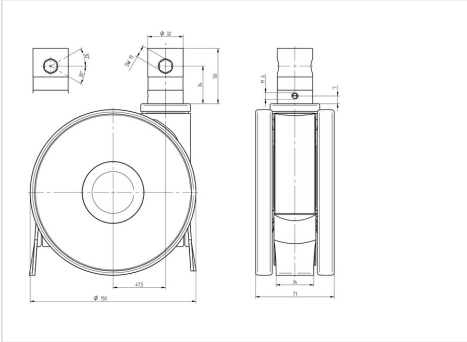
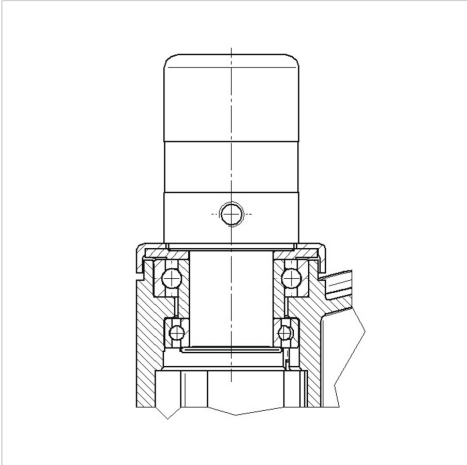
### Structure & Mounting