# AGILA

## 2074PJP150R26-28S45

EAN 4031582348422

BETTER MOBILITY. BETTER LIFE.

Swivel castor with central, total lock and central directional lock, housing made of pressed steel, bright zinc plated, blue passivated, double ball bearing swivel head, wheel axle riveted for attaching the cover, covering of the housing made of Polypropylene, RAL 9002 grey-white, stem with cam hole for profile bars. Wheel centre made of Polypropylene, Tread: TENTEprene (thermoplastic rubber), grey non-marking, precision ball bearing

Picture may differ from original product

### Technical Data

| | |
|---|---|
| Wheel diameter | 150 mm |
| Wheel width | 32 mm |
| Castor width | 67 mm |
| Bolt-Ø | 28 mm |
| Bolt length | 96 mm |
| Dome-Ø | 67 mm |
| Offset | 45 mm |
| Swivel Interference | 240 mm |
| Overall height | 188 mm |
| Temperature | - 20 / + 60 °C |
| Standard | EN_12530 |
| Weight | 1.098 kg |
| Swivel Radius | 120 mm |
| Hardness of tread | Shore A 87 |
| Load capacity | 100 kg |
| Load capacity (static) | 200 kg |

### Structure & Mounting

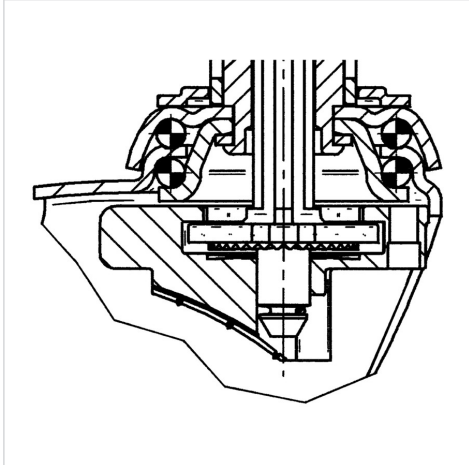

### Advantages at a glance

| | |
|---|---|
| Roll performance | ●●●○○ |
| Movement noise | ●●●○○ |
| Attrition | ●●●○○ |
| Corrosion resistance | ●●●○○ |

© Copyright 2024 TENTE International **www.tente.com** 12/10/2024