LINEA

5944UAP150R36-32S30OH155 4xM6

EAN 4031582338904

BETTER MOBILITY. BETTER LIFE.

Swivel Caster with central, total or directional lock, housing made of Polyamide, precision ball bearing in swivel head, stem with cam hole for profile bars, short version. Wheel center made of Polyamide, Tread: Polyurethane, precision ball bearing TÜV Süd certified product.

Picture may differ from original product

Technical Data

Wheel diameter	5.91 in
Wheel width	0.59 in
Caster width	2.80 in
Bolt-Ø	1.26 in
Bolt length	1.97 in
Dome-Ø	1.79 in
Offset	1.87 in
Swivel Interference	10.00 in
Overall height	6.10 in
Temperature	- 14 / + 104 °F
Standard	EN 12531
Weight	2.374 lbs
Swivel Radius	5.00 in
Hardness of tread	Shore D 42
Load capacity (dynamic)	330 lbs
Load capacity (static)	990 lbs

Dimensions

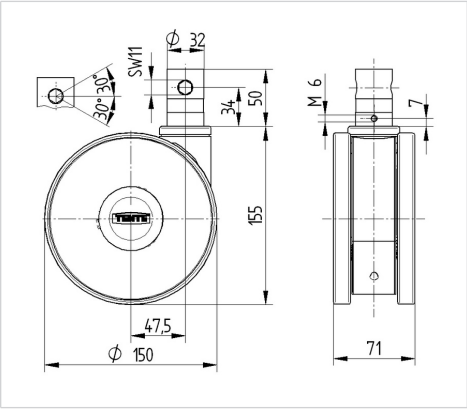

Structure & Mounting

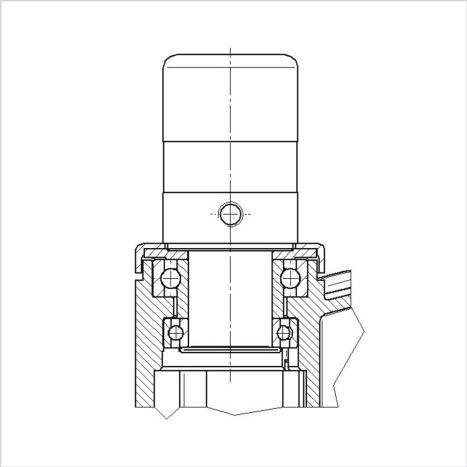

Advantages at a glance

Roll performance	●●●●●
Movement noise	●●●○○
Attrition	●●●●○
Corrosion resistance	●●●●○

© Copyright 2024 TENTE International **www.tente.com** 04/26/2024

LINEA

5944UAP150R36-32S30OH155 4xM6

EAN 4031582338904

BETTER MOBILITY. BETTER LIFE.

Structure & Mounting