DELTA

3641ITP200P63 Flat

EAN 4031582337464

BETTER MOBILITY. BETTER LIFE.

Swivel caster with directional lock, housing made of heavy pressed steel, bright zinc plated, blue passivated, precision ball bearing swivel head, sealed, wheel axle with nut, plate fitting. Wheel center made of Aluminum, Tread: Polyurethane, casted, precision ball bearing

Picture may differ from original product

Technical Data

Wheel diameter	7.87 in
Wheel width	1.97 in
Caster width	3.70 in
Plate size	5.39 x 4.13 in
Plate hole centers	4.13 x 3.15/2.95 in
Plate hole	0.43 in
Dome-Ø	3.70 in
Offset	2.17 in
Swivel Interference	12.20 in
Overall height	9.84 in
Temperature	+ 14 / + 140 °F
Standard	EN 12532
Weight	7.818 lbs
Swivel Radius	6.10 in
Hardness of tread	Shore A 92
Load capacity (dynamic)	1325 lbs
Load capacity (static)	2645 lbs

Advantages at a glance

Roll performance	●●●○○
Movement noise	●●●○○
Attrition	●●●●○
Corrosion resistance	●●●○○

Dimensions

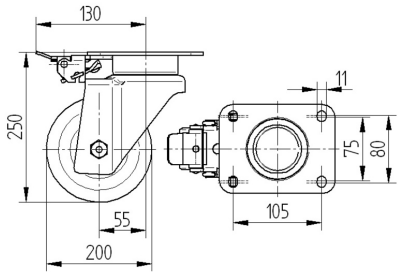

Structure & Mounting

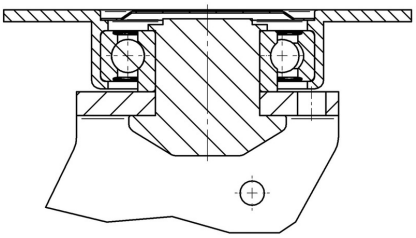

© Copyright 2024 TENTE International **www.tente.com** 10/12/2024

DELTA

3641ITP200P63 Flat

EAN 4031582337464

BETTER MOBILITY. BETTER LIFE.
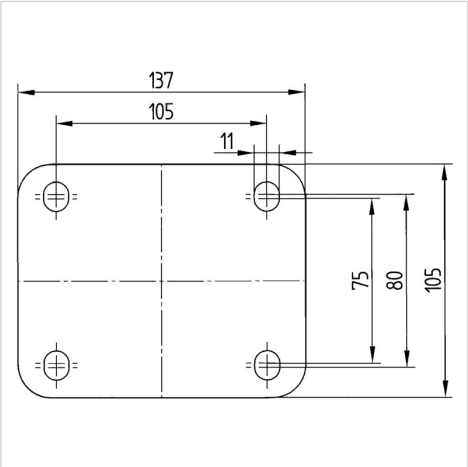
Structure & Mounting