AGILA

2470DIK100R05-28

EAN 4031582300628

BETTER MOBILITY. BETTER LIFE.

Swivel castor, housing made of pressed steel, bright zinc plated, blue passivated, double ball bearing swivel head, wheel axle with nut, solid plug fitting. Wheel centre made of pressed steel, Tread: solid rubber, grey non-marking, with threadguards, cone ball bearing

Picture may differ from original product

Technical Data

Wheel diameter	100 mm
Wheel width	32 mm
Bolt-Ø	28 mm
Bolt length	45 mm
Offset	38 mm
Swivel Interference	176 mm
Overall height	138 mm
Temperature	- 20 / + 85 °C
Standard	EN_12530
Weight	1.111 kg
Swivel Radius	88 mm
Hardness of tread	Shore A 80
Load capacity	80 kg
Load capacity (static)	160 kg

Advantages at a glance

Roll performance	●●●○○
Movement noise	●●●○○
Attrition	●●●○○
Corrosion resistance	●●●○○

Dimensions

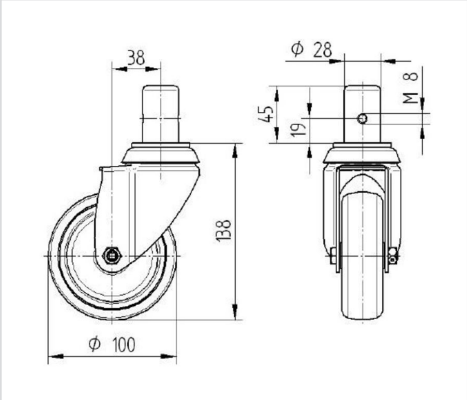

Structure & Mounting

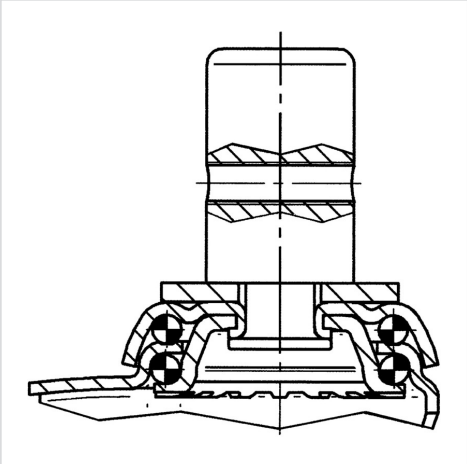

© Copyright 2024 TENTE International **www.tente.com** 12/10/2024